VAISALA

Lidar Ceilometer CL61

with depolarization measurement

Vaisala Lidar Ceilometer CL61 is a high-performance light detection and ranging (LiDAR) instrument with depolarization measurement capable of unattended operation 24/7 in all conditions. The depolarization measurement enables differentiation between solid, liquid, or mixed-phase clouds and precipitation, providing ready-to-use information for atmospheric characterization.

Features

- Depolarization measurement to support liquid/solid differentiation, as well as detection of potential dust and volcanic ash
- Attenuated backscatter profiling for the full range of up to 15.4 km (9.6 mi)
- Improved signal-to-noise ratio (SNR) for enhanced atmospheric structure reporting
- Unique single-lens optics with excellent performance also at low altitudes
- Patented technology to minimize the effect of water vapor absorption
- Measurement data available in netCDF format
- Traceable factory calibration

Improved decision-making with more detailed view of atmospheric conditions

CL61 uses attenuated backscatter profiles measured in 2 polarization directions to calculate the depolarization ratio. The depolarization measurement not only enables the liquid/solid differentiation, but also makes it possible to detect dust and volcanic ash.

To further enhance atmospheric structure reporting, CL61 has an improved signal-to-noise ratio (SNR). The improved high-resolution attenuated backscatter profiling is available for the full range, up to 15.4 km (9.6 mi).

With these enhanced features and the BL-View software, you also get a detailed view of the atmospheric conditions within the planetary boundary layer, for example, for air quality forecasting.

Lidar technology

Vaisala has extensive lidar expertise dating back to the 1980s, leveraged in the CL61. Thousands of Vaisala ceilometers are installed worldwide.

Vaisala single-lens technology provides reliable measurements in low altitudes.

The new patented transmitter technology in CL61 minimizes the effect of water vapor absorption.

Single-receiver depolarization measurement does not require field calibration.

Portable and versatile data

Measurement data is available in the universal and accessible netCDF format, making data sharing easy with colleagues and other users.

The system is able to internally buffer data to smooth out brief communication inconsistencies. Data is labeled with time, based on a clock synced using Network Time Protocol.

Easy installation and maintenance

CL61 is a compact and eye-safe lidar ceilometer with modern communication and network capabilities. The modular structure enables safe and easy installation by 1 person.

The product has low maintenance requirements, with extensive self-diagnostics and embedded fault analysis minimizing downtime. Remote Ethernet access reduces the need for site visits and interruption of measurement data flow. These benefits contribute to an overall low cost of ownership.

Integrated security software keeps your instrument and data safe.

Technical data

Measurement performance

Measurement range, cloud and backscatter	0–15 400 m (0–50 500 ft)
Reporting resolution	4.8 m (15.7 ft)
Measurement interval	5 s
Measurement accuracy against hard target	±5 m (16.4 ft)
Laser	InGaAs diode
Laser wavelength	910.55 nm

Data reporting

Atmospheric parameters	Cloud base heights (up to 5 layers) Cloud depth and penetration Precipitation/fog detection Sky condition
Atmospheric profiles	Attenuated backscatter profile Parallel and cross-polarized profiles Depolarization ratio profile
Status information	Internal monitoring data

Inputs and outputs

Nominal voltage	120/230 V AC 3.1/1.6 A (370 W)
Operating voltage	90–130 / 200–250 V AC
Overvoltage category	CAT II
Operating frequency	50–60 Hz
Data interface	Ethernet (> 10 Mbit/s)
Maintenance interface	Ethernet
Message format	NetCDF
Power consumption	
With heating	Max. 370 W
Without heating	Max. 100 W

Mechanical specifications

Dimensions (H × W × L)	1400 × 420 × 512 mm (55.12 × 16.54 × 20.16 in)
Weight, total	55 kg (121 lb)
Weight, radiation shield	23 kg (51 lb)
Weight, interface unit	12 kg (26 lb)
Weight, measurement unit	20 kg (44 lb)
Material	Aluminum
Color	White (RAL9003)
Coating	Multi-layer coating to prevent environmental corrosion
Tilt angle	Default: 3°

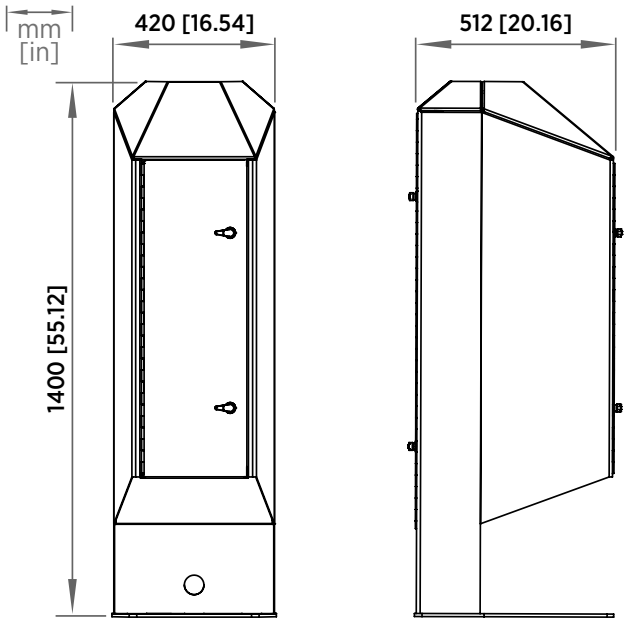

CL61 dimensions

Operating environment

Operating environment	Outdoor use
Operating temperature	−50 ... +55 °C (−58 ... +131 °F)
Storage temperature	−50 ... +60 °C (−58 ... +140 °F)
Operating humidity	0–100 %RH
Maximum operating wind speed	60 m/s (134 mph)
IP rating (when inside radiation shield, excluding window blower)	IP66
NEMA rating (when inside radiation shield)	Type 4X

Compliance

EU directives and regulations	EMC Directive (2014/30/EU) Low Voltage Directive (2014/35/EU) RoHS Directive (2011/65/EU) as amended by 2015/863
EMC immunity	EN 61326-1, industrial environment
EMC emissions	CISPR 32 / EN 55032, Class B
Safety	IEC/EN/UL/CSA-C22.2 61010-1
Eye safety [1)]	Class 1M laser product IEC/EN 60825-1:2014
Compliance marks	CE, China RoHS, RCM, UKCA
Listing marks	SGS (USA and Canada)

Complies with ICAO frangibility requirements.

1) Complies with 21 CFR 1040.10 and 1040.11 except for conformance with IEC 60825-1 ED. 3., as described in Laser Notice No. 56, dated May 8, 2019.

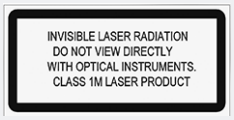

VAISALA

vaisala.com

Published by Vaisala | B211780EN-H © Vaisala 2026

All rights reserved. Any logos and/or product names are trademarks of Vaisala or its individual partners. Any reproduction, transfer, distribution or storage of information contained in this document is strictly prohibited. All specifications — technical included — are subject to change without notice.